Ring Communications (UK) Ltd
Newmarket Business Centre
341 Exning Road
Newmarket, Suffolk, CB8 0AT
Tel: +44(0) 1638 660 629
E-Mail sales@ringuk.com
Web: www.ringuk.co.uk

Scanner to Control Room Intercom System with Faraday Cage – Pulse

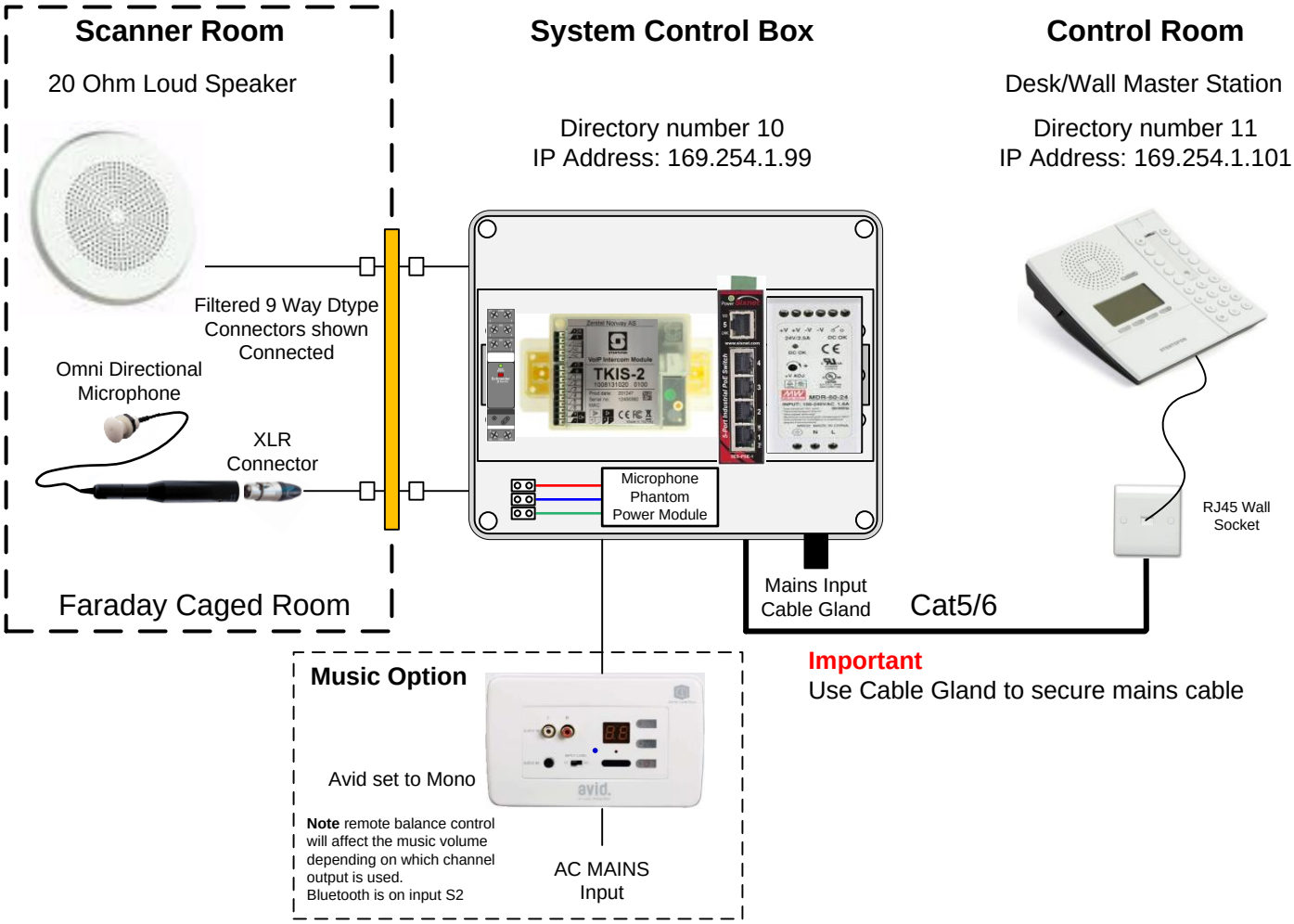

Installation
Desk/wall station should be mounted with easy access to controls.
System Control Box can be mounted in the control room with access for maintenance.
Cable between Desk/wall Station and the System Control Box is CAT5 cable.
It is **important** to use the supplied 9 way Dtype connectors with built in filters for connecting Microphone and Loudspeaker to the System control box. There should be a spare plate in the filter interface panel that will need a 9 way Dtype hole cut into it to mount the Dtype filter with its Gasket. The Dtype connectors are wired ready to connect to supplied Microphone and Speaker cables, see page 3.
Cable for microphone should be microphone cable, 2 core plus Screen.
The speaker requires 2 core speaker cable, use same type cable between Avid if fitted.
See Avid installation guide.

Recommendations
Microphone must be fitted where it can pickup speech and not equipment noise. Keep away from aircon units.
Loudspeaker and Microphone must be spaced so that there is no Feedback, More than one metre apart.

Operation
To communicate with the patient on the Scanner, press the Star key"*", then press and hold the "M" key to talk to the patient, let go to return to listen mode.

Patient in the theatre, cannot hear operator without the "M" key is being pressed.
When Pressing the "M" key, relay will cut music from Avid (if fitted).
Bluetooth setup codes are under face plate, Bluetooth input is on input S2
See Avid Manual for operational instructions.

Close System
To cancel all communications (Switch OFF) press Cancel.
Music will still be heard from Avid to speaker.
Press ON/OFF button on Avid to turn OFF, then switch off music source.

Ring Communications (UK) Ltd
Newmarket Business Centre
341 Exning Road
Newmarket, Suffolk, CB8 0AT
Tel: +44(0) 1638 660 629
E-Mail sales@ringuk.com
Web: www.ringuk.co.uk

Scanner to Control Room Intercom System with Faraday Cage – Pulse

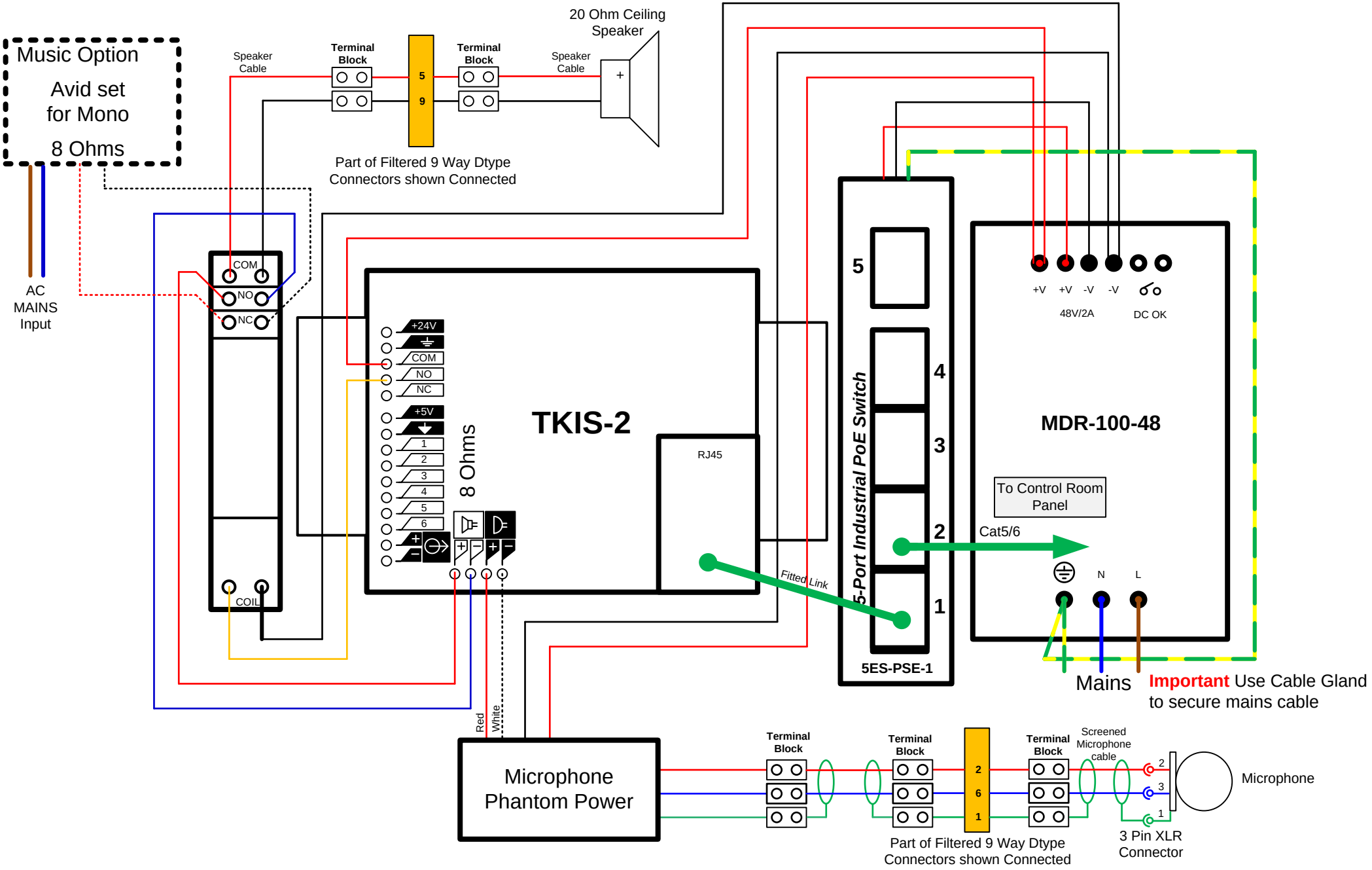

Ring Communications (UK) Ltd
Newmarket Business Centre
341 Exning Road
Newmarket, Suffolk, CB8 0AT
Tel: +44(0) 1638 660 629
E-Mail sales@ringuk.com
Web: www.ringuk.co.uk

Scanner to Control Room Intercom System with Faraday Cage – Pulse

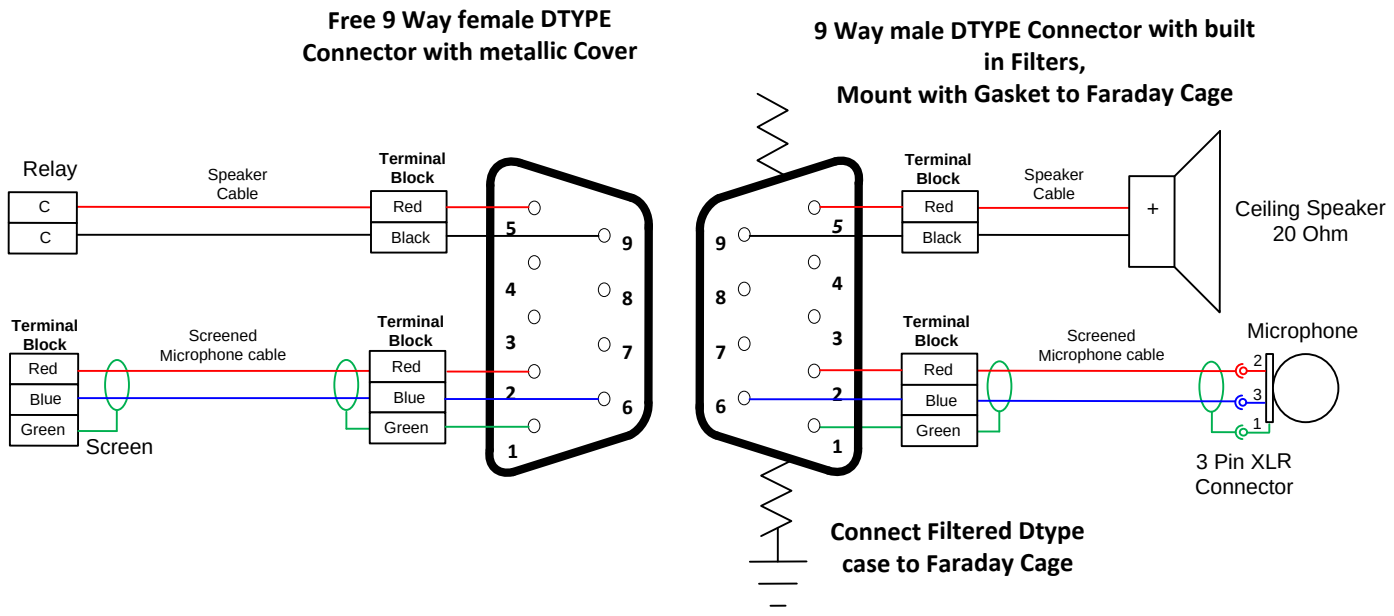

It is **important** to use the supplied 9 way Dtype connectors with built in filters for connecting Microphone and Loudspeaker to the System control box.
There should be a spare plate in the filter interface panel that will need a 9 way Dtype hole cut into it to mount the Dtype filter with its Gasket.
The Dtype connectors are wired ready to connect to supplied Microphone and Speaker cables.
Cable for microphone should be microphone cable, 2 core plus Screen.
The speaker requires 2 core speaker cable, use same type cable between Avid if fitted.